FA-10

Third Angle Projection Units: mm

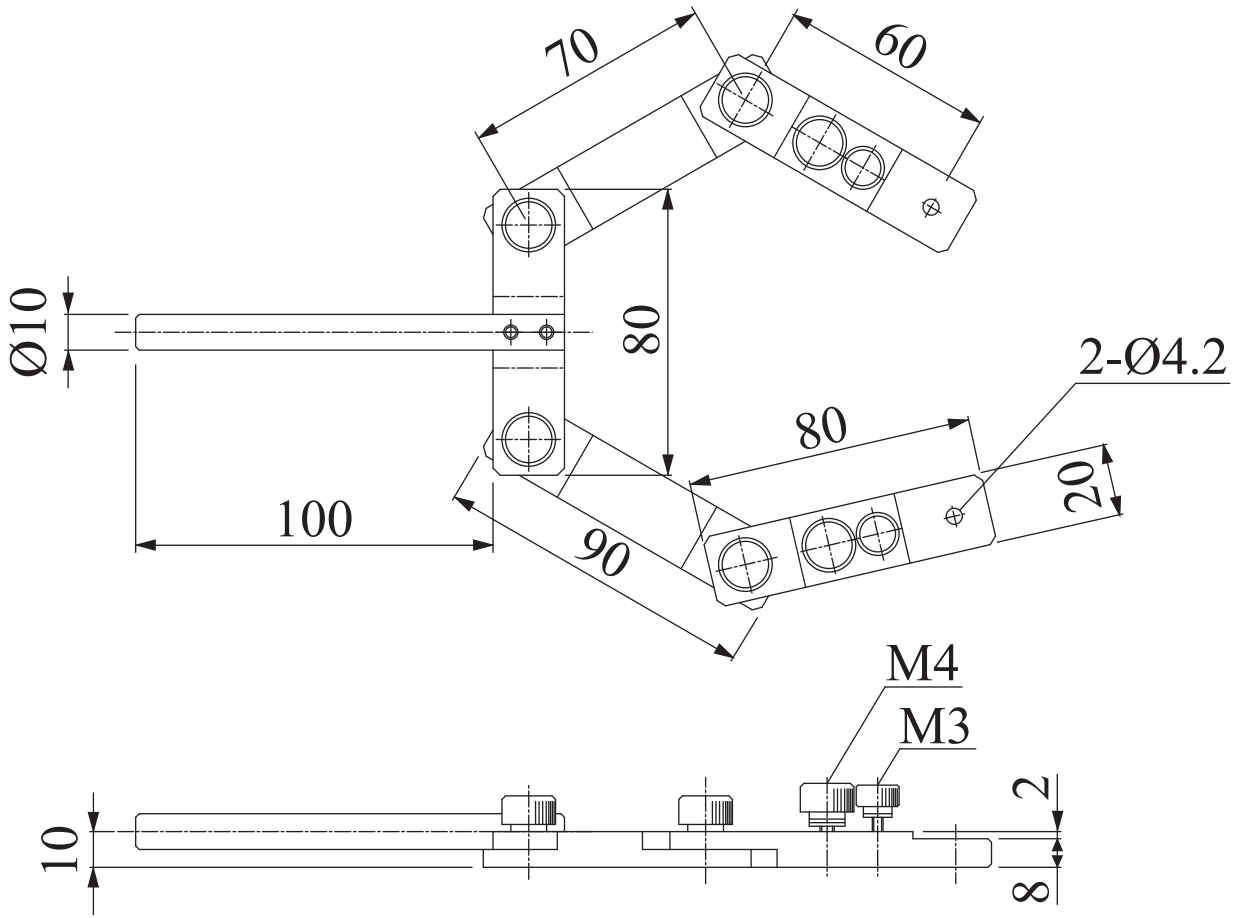

CCS Inc.