PD3-10024-8-EIK

Unit: mm

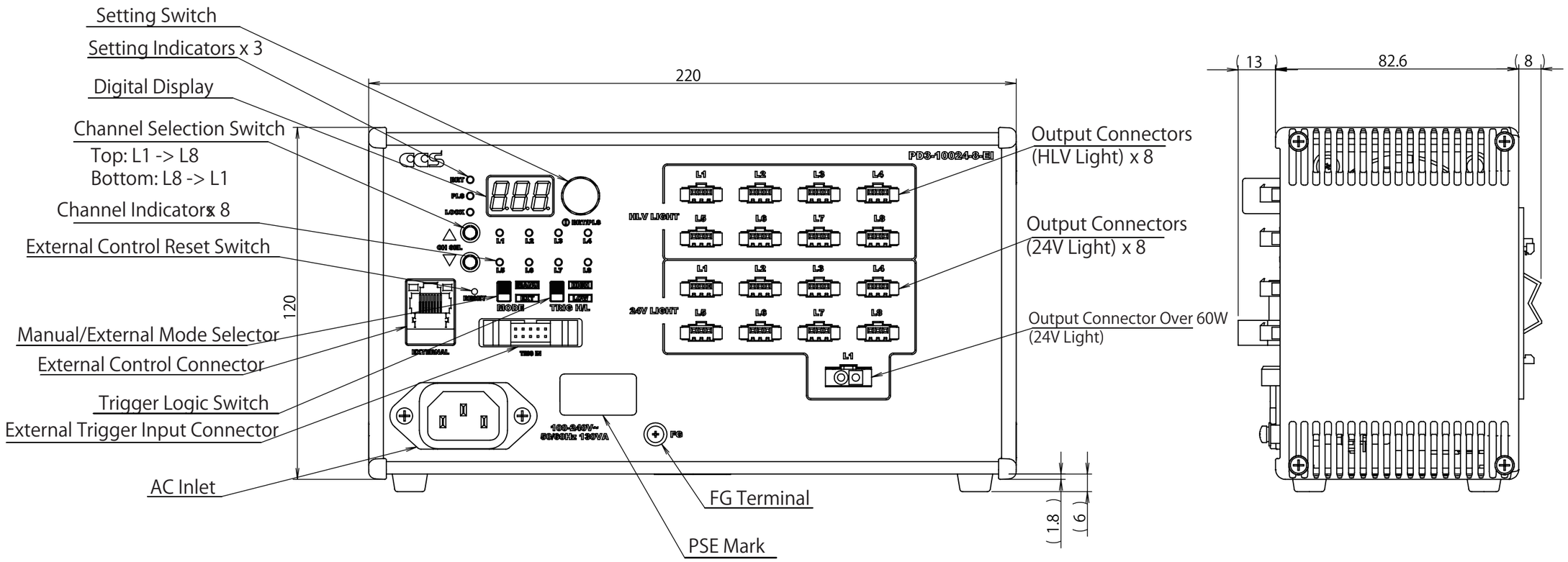

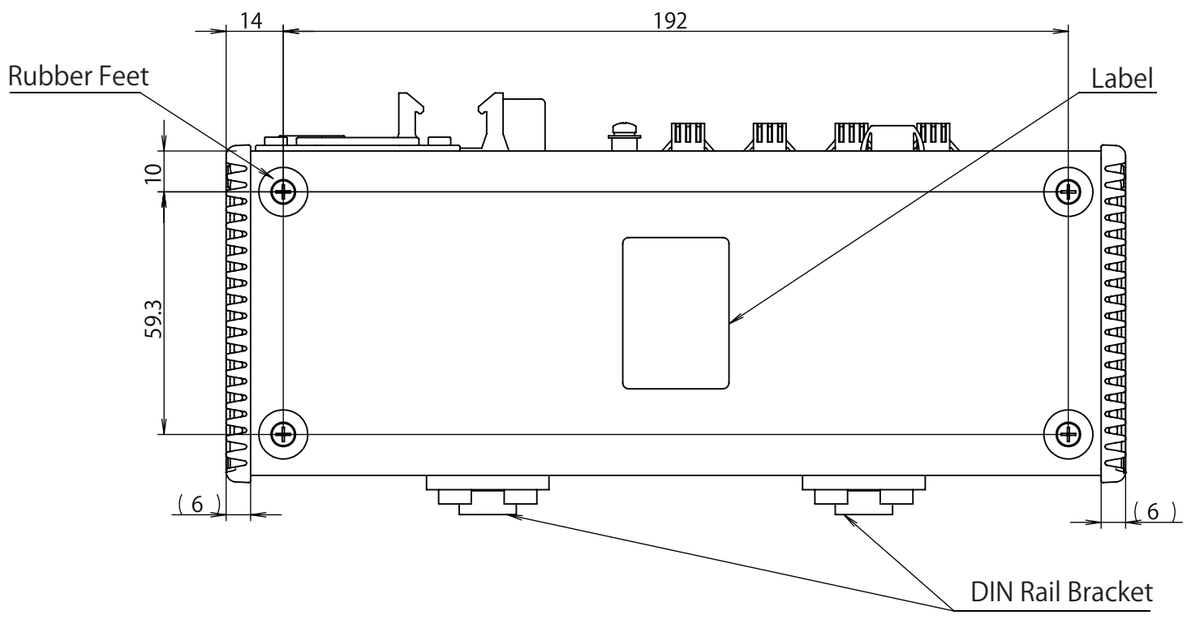

Copyright(C) 2021 CCS Inc. All rights reserved. Reproduction or photocopy without permission is prohibited.

CCS Inc.